IL'YEVICH, A.P.; SHCHEPKIN, S.I., zasluzhennyy deyatel' nauki i tekhniki RSFSR, professor, redaktor; GRINBERG, I.F., redaktor; PANOVA, L.Ya., tekhnicheskiy redaktor.

[Machinery for ceramic and glass factories] Mekhanicheskoe oborudovanie keramicheskikh i stekol'nykh zavodov. Pod red. S.I.Shchepkina. Moskva, Gos. izd-vo lit-ry po stroit. materialam, 1952. 675 p. (MLRA 7:7)

(Glass manufacture) (Ceramic industries)

ILI'YEVICH, A. P.

Journal of the American
Ceramic Society
July 1954
Production Equipment and
Unit Operations

Mechanical Equipment of Ceramic and Glass Works (Mekhanicheskoe oborudovanie keramicheskikh i stekol'nykh zavodov). A. P. Il'yevich. Promstroiizdat, Moscow, 1952. Reviewed in *Steklo i Keramika*, 10 [8] 29-30 (1953).—Theory, classification, technical characteristics, construction, and operation of equipment are discussed with extensive illustrations. Fundamental data of machines are tabulated, and tests are given with each chapter. B.Z.K.

IL'YEVICH, A. P.

"An Investigation of the Effect of the Construction and Technological Parameters of a Ribbon-Blade Press on the Effectiveness of Its Operation." Cand Tech Sci, Moscow Inst of Chemical Machine Building, 16 Dec 54. (VM, 6 Dec 54)

Survey of Scientific and Technical Dissertations Defended at USSR Higher Educational Institutions (12)

SO: SUM No. 556, 24 Jun 55

SOV/2482

PHASE I BOOK EXPLOITATION

25(2);14(2,5)

Il'yevich, Abram Pavlovich, Candidate of Technical Sciences

Oborudovaniye zavodov silikatnoy promyshlennosti; obshchiy kurs (Equipment for Plants of the Silicate Industry; General Course) Moscow, Gosstroyizdat, 1959. 470 p. Errata slip inserted. 8,000 copies printed.

Scientific Ed.: Z.B. Kantorovich; Ed. of Publishing House: G.A. Demina, and E.A. Gurvich; Tech. Eds.: P.S. Gilenson, and L.M. Solntseva.

PURPOSE: This textbook is approved by the Ministry of Higher Education for students of tekhnikums of the building materials industry. It may also be useful to engineers and technicians.

COVERAGE: The book contains basic information on construction and design of machinery for mining, crushing, grinding classification dressing, measuring, mixing and drying materials. These include:

Card 1/19

4
4
4

Card

and air distribution

of follow valve and axial

YEVSKAYA, G. D.

CA

17

A new control method in producing collargol. A. I. Varisma and G. D. Il'evskaya. *Farmatsiya* 6, No. 3, 19-20(1943).—In making collargol the colors and end-point of the heating operation (reducing Ag_2O to Ag) are conveniently detd. with Cu foil as indicator (accurate to 1 min. in fast or 5 min. in slow heating). If the alky. of the protein soln. is not allowed to rise above 0.4%, the colloid-chem. process of collargol formation remains within the limits of chem. reduction to Ag, the latter protein being less sensitive to the medium. This is confirmed by factory tests. The Ag content of collargol is not related to the time of heating nor to protalbinic acid content of the medium. Casein is the preferred source of protein in commercial production.

Julian F. Smith

ASM-SLA METALLURGICAL LITERATURE CLASSIFICATION

IL'YEVSKIY, A. M.

"Investigation of the Phenomena of the Electrical Heating of a Parallelepiped by Means of a Cylindrical Electrode System." Cand Tech Sci, Rostov Construction Engineering Inst, Min Higher Education USSR, Rostov, 1954. (KL, No 2, Jan 55)

Survey of Scientific and Technical Dissertations Defended at USSR Higher Educational Institutions (12)

SO: SUM No. 556, 24 Jun 55

IL'YEVSKIY, A.M.

Experimental determining of specific volumetric resistance of slag concrete. Trudy RISI no.4:103-107 '55. (MIRA 12:1)
(Concrete--Testing)

IL'YEVSKIY, A.M., inzh.

Using physical and mathematical analysis in studying structural problems. Trudy RISI no.11:81-91 '58. (MIRA 13:5)

1. Rostovskiy-na-Donu inzhenernostroitel'nyy institut.
(Structures, Theory of)
(Electromechanical analogies)

IL'YEVSKIY, A.M., inzhener

Economic comparison of steam and electrode heating of large slag concrete blocks. Trudy RISI no.15:55-62 '58. (MIRA 13:6)
(Concrete blocks)
(Steam heating)
(Electric heating)

IL'YEVSKIY, A.M., inzh.

"Electric heating of precast concrete and reinforced concrete articles on building sites" by V.P.Ganin. Reviewed by A.M.Il'evskii. Bet.i zhel.-bet. no.6:285-286 Je '61. (MIRA 14:7)
(Precast concrete)
(Ganin, V.P.)

IL'YEVSKIY, A.M., inzh.

Effect of the thermal conductivity of concrete on the heating up of concrete blocks. [Trudy] RIGI no.17:87-92 '60. (MIRA 15:6)

(Concrete--Thermal properties)

GERASIMOV, I., gvardii general-mayor; BEDRIN, A., gvardii podpolkovnik; IL'YEVSKIY, B., gvardii mayor

From tanks from indirect laying positions. Voen. vest. 42 no.5:100-105 My '63. (MIRA 16:5)
(Tanks (Military science)) (Shooting, Military)

IL'YEVSKIY, I.I.

The use of automatic welding for the correction of spot defects in low-carbon steel parts. Sv r.proizv. no.8:23-24 Ag'55. (MLRA 8:11)
(Electric welding)

EWT 1 EWP(k)/EWP(q)/EWT(m)/BDS AFFTC/ASD JD/JG
S/0135/63/000/005/0021/0024

AUTHOR: Ilyevskiy, I. I. (Engineer); Kochubov, N. S. (Engineer) 40

TITLE: Titanium brazing with rapid heating. No. 150740

SOURCE: Svarochnoye proizvodstvo, no. 5, 1963, 21-24

TOPIC TAGS: titanium-alloy brazing, molten-salt-bath brazing, controlled-atmosphere brazing, brazing alloy, brazed-joint strength

ABSTRACT: Since titanium forms intermetallic compounds with the usual constituents of brazing alloys (Cu, Ag, Ni, etc.), a brittle layer is formed between the base metal and the brazing alloy. It is therefore important to heat the parts to brazing temperatures as rapidly as possible. This can be done with high-frequency induction heating, which, however, is not always practicable. In a new method developed by the authors (Authors' Certificate No. 150740, 16 Jan 1961), the parts to be brazed are placed in a hermetically sealed, thin-walled, stainless-steel container, which is then immersed in a fused-salt ($BaCl_2$) bath. An overpressure of argon is maintained in the container to prevent inleakage of air. Since during

Card 1/2

L 11103-63
ACCESSION NR: AP3000966

the operation the container is immersed and upon removal from the bath is coated with a salt crust, no excessive oxidation occurs, and the service life of the container exceeds 1000 operations at brazing temperatures up to 1000C. The method was used in studying the effect of the heating cycle and the type of brazing alloy on the mechanical properties of brazed joints of VT2-1 Ti alloy [4.0--5.2% Al, 1.5--2.5% Cr, 1.0--2.0% Mo]. The most satisfactory results were obtained with holding time of 1 to 2 min. Joints brazed with PSr72LMN brazing alloy (72% Ag, 26.5% Cu, 1% Ni, 0.5% Li; brazing temperature, 880C) had a shear strength of 18.3, 15.6, and 13.2 kg/mm^2 at 20, 200, and 400C, respectively; the corresponding figures for joints brazed with pure Ag were 17.4, 12.3, and 8.2 kg/mm^2. (All figures apply to joints made with a holding time of 2 min at brazing temperature.) Joints brazed with PSr72LMN alloy had a higher Vickers hardness in the intermetallic layer than those brazed with pure Ag, indicating a greater embrittling effect of Cu. The method can also be used for brazing stainless steels and heat-resistant alloys, as well as refractory metals, at temperatures up to 1300C. Orig. art. has: 8 figures and 2 tables.

ASSOCIATION: none
SUBMITTED: 00 DATE ACQ: 11Jun63 ENCL: 00
SUB CODE: MA,ML NO REF SOV: 000 OTHER: 000
Card 2/2 JCR/ek

IL'YEVSKIY, I.I., inzh.

Drawback of research papers on welding. Svar. proizv. no.5:36-39 My '64. (MIRA 18:11)

IL'YE[illegible] [illegible], tech.

More on the drawbacks of certain soldering operations. Svar. proizv. no.8:39-40 Ag '65. (MIRA 18:8)

1. IL'YEVSKIY M.

2. USSR (600)

4. Time Study

7. Indexes of the utilization of manpower, Vest.stat. no.6, 1952.

9. Monthly List of Russian Accessions, Library of Congress, April 1953, Uncl.

IL'YEVSKIY M.

2-2-6/12

AUTHOR: Il'yevskiy, M. (Khar'kov)

TITLE: The Problem of Economic Indexes (K voprosu ob ekonomicheskikh indeksakh)

PERIODICAL: Vestnik Statistiki, 1957, # 2, p 49-58 (USSR)

ABSTRACT: The article deals with the calculation and use of the so called "index of the structural factor" and also with the index without the influence of the structural factor. The problem is examined by means of examples taken from indexes of labor efficiency. Especially developed and currently used is the system of correlated indexes which enable measurement of the influence of individual factors upon the growth of labor efficiency. This system as a whole has been widely acknowledged and does not provoke objections but there exist considerable differences of opinion as to the calculation of the index, characterizing the change in the average labor efficiency at the expense of the structural factor. The latter covers in this case the change in the specific production weight of the enterprises of the different levels of labor efficiency in the total number of workmen. If, for example, in one plant the output per workman equals 100 tons and in the other 80 tons, and the specific production weight of each plant with respect

Card 1/3

to the total number of workmen has changed (in the accounting period compared with the basic one), such a change will be the structural factor influencing the average labor efficiency. The formula for calculating the total index of labor efficiency is taken from a manual of industrial statistics and runs as follows:

$$I = \frac{\sum d_1 v_1}{\sum d_0 v_0}$$

The average labor efficiency in this case is presented as a function of two variables. One of them is the specific production weight per region expressed by the total number of workmen, designated as "d", the other variable is the output per workman, designated as "v". The average output per workman is presented as the sum of the products of these variables, i.e. as $\sum dv$, the basic period being $\sum d_0 v_0$ and the accounting period $\sum d_1 v_1$. In cases where the first variable changes, all designations remain the same with the exception of "d" which changes the average output per workman from $\sum d_0 v_0$ into $\sum d_1 v_0$ and with a different second variable, the average output per workman changes from $\sum d_1 v_0$ to $\sum d_1 v_1$. In connection with the

IL'YICHEV, A.S.

IL'YICHEV, Aleksandr Semenovich, professor, doktor tekhnicheskikh nauk; [illegible], G.M., professor, redaktor; PROZOROVSKAYA, V.I., tekhnicheskiy redaktor

[Collected works] Sobranie trudov. Moskva, Ugletekhizdat. Vol. 2. [Mine hoisting machinery] Shakhtnye pod"emnye ustanovki. 1954. 206 p. [Microfilm] (MLRA 8:4)

1. Chlen-korrespondent Akademii nauk SSSR (for Il'yichev).
(Mining hoisting)

28338 S/124/61/000/006/011/027
A005/A130

10.6300

AUTHOR: Il'yichev, V.D.

TITLE: Application of the Euler equations to the theory of flutter of helicopter propellers

PERIODICAL: Referativnyy zhurnal. Mekhanika, no. 6, 1961, 31, abstract 6 B 166. (Tr. Mosk. fiz.-tekhn. in-ta, 1960, no. 5, 41 - 54)

TEXT: The author studied the influence of vibrations of the rigid blades of helicopter propellers in the plane of chord on the magnitude of critical revolutions of flutter of propellers. He considers the blade to be a rigid body moving about and immovable point under the action of external forces and makes use of the formulation method of the Euler motion equation. The nonlinear equations of blade motion are linearized assuming that the flutter vibrations are small and superimposed upon given stationary nonlinear motion. Calculating the aerodynamic forces he assumes the profile of each cross section of the blade to be flown over by a plane-parallel stream and swinging relatively to this stream. The calculations presented show that the blade vibrations in the plane of revolution decrease the critical revolutions of flutter, and the effect mentioned increases with in-

Card 1/2

28338 S/124/61/000/006/011/027
A005/A130

Application of the Euler equations to the....

creasing angle of incidence of the blade and angle of taper. The author also studies the influence on the present effect of a mass concentrated at the blade end.

M. Klyachko

[Abstracter's note: Complete translation.]

Card 2/2

BLAGOSKLONOV, K.N.; IL'YICHEV, V.D.

Reaction of some birds to distress calls. Zool. zhur. 43 no.2: 292-293 '64. (MIRA 17:6)

1. Kafedra zoologii pozvonochnykh Moskovskogo gosudarstvennogo universiteta.

SLOVOKHOTOVA, N.A.; IL'YICHEVA, Z.F.; VASIL'YEV, L.A.; KARGIN, V.A.

Effect of ionized radiation on the structure of polypropylene. Vysokom. soed. 6 no.4:608-614 Ap '64. (MIRA 17:6)

1. Nauchno-issledovatel'skiy fiziko-khimicheskiy institut imeni L.Ya. Karpova.

APPROVED FOR RELEASE: 04/03/2001 CIA-RDP86-00513R000618520017-1"

APPROVED FOR RELEASE: 04/03/2001 CIA-RDP86-00513R000618520017-1"

MIKHEYEV, V.V.; SHTUL'MAN, D.R.; IL'YINA, N.A.; GALINA, I.V.; KOLOSOVA, O.A.

Amyotrophic lateral sclerosis syndrome in cervical osteochondrosis. Zhur. nevr. i. psikh. 63 no.6:833-840 '63. (MIRA 17:6)

1. Klinika nervnykh bolezney (direktor - prof. V.V. Mikheyev) I Moskovskogo ordena Lenina meditsinskogo instituta imeni I.M. Sechenova.

POTINTSEV, V.K.; IL'YINSKIY, G.A.

Upper Paleozoic and Lower Mesozoic granitoids in the northeastern margin of the Bureya Massif. Trudy VSEGEI 81:157-167 '63 (MIRA 17:7)

GERCHIKOV, D.S., kand.tekhn.nauk; IGNAT'YEV, O.M.; ILYK, M.V.

Using inclined gamma-ray beam in determining the interface between liquid metal and slag. Avtom. i prib. no. 1:61-62 Ja-Mr '64. (MIRA 17:5)

ANBINDER, Ya.Ye. [Anbinder, IA.IE.]; SHPAKOVSKIY, N.Ye. [Shpakovs'kyi, N.E.]; DARBINYAN, S.A.; KOMAROV, V.V.; KOMAROVA, T.V.; KOZLOV, Yu.A.; KONOKOTIN, L.P.; ZEREKIDZE, V.M.; SHULYATITSKIY, S.M. [Shyliatyts'kyi, S.M.]; KHODURSKIY, Ye.A. [Khodurs'kyi, IE.A.]; OBUSHINSKIY, Ye.I. [Obushyns'kyi, IE.I.]; GVOZDIK, A.A. [Hvozdyk, A.A.]; NIKITINA, M.A.; LUPASHKO, N.F.; BESKROVNYY, M.N.; TSIMBLER, M.Ye. [TSymbler, M.IE.]; ILYN, A.N.; TOTADZE, P.M.; ZHIGURS, Kh.Yu.; ZAKREVSKIY, Ye.S. [Zakrevs'kyi, IE.S.]; FEDOROVICH, A.G. [Fedorovych, A.H.]; CHALENKO, D.K.; KHOMUTOV, D.A.; SKURIKHIN, I.M.; NILOV, V.I.; YEFIMOV, B.N. [IEfimov, B.N.]; KAZANOVSKIY, V.S. [Kazanovs'kyi, V.S.]; ZOTIKOV, L.S.; KOCHURENKO, M.A.

Soviet certificates of invention. Khar. prom. no.2:57-59 Ap-Je '65. (MIRA 18:5)

L 01093-67 EWT(d)/EWT(m)/EWP(w)/EWP(v)/EWP(k) IJP(c) WW/EM

ACC NR: AP6026338 SOURCE CODE: UR/0145/66/000/003/0030/0035

AUTHOR: Ilyshev, V. M. (Aspirant)

ORG: None

TITLE: Natural oscillations of a two-layered circular cylindrical shell with elastic connectors

SOURCE: IVUZ. Mashinostroyeniye, no. 3, 1966, 30-35

TOPIC TAGS: shell theory, cylindric shell structure, elasticity, free oscillation

ABSTRACT: The author considers natural oscillations in a system of two closed coaxial circular cylindrical shells of differing thickness interconnected by a rather large number of identical equidistant rods (see figure). It is assumed that the relative thickness H/R is negligible in comparision with unity and that displacement of points is small in comparision with the thickness of either shell. Deformations are elastic and the materials of the shells and elastic connections are different and isotropic. The Kirchhoff-Love hypothesis is used for the inner and outer shells. Each rod is taken as approximately equal to H in length. The rods are assumed to be absolutely rigid with respect to shear and tension. Rotational inertia of the rod about axis Oz is disregarded. The discrete rod connections are replaced by some continuous medium which is equivalent to the rods from the energy standpoint. The standard methods

Card 1/2 UDC: 620.10

L 01093-67

ACC NR: AP6026338

of variational calculus are used to derive a system of five partial differential equations of the ninth order and two methods for simplifying this system are discussed. The applicability of the simplified systems is discussed from the standpoint of energy error. This paper was presented for publication by Professor V. V. Bolotin, Doctor of technical sciences, Moscow Power Engineering Institute. Orig. art. has: 2 figures, 10 formulas.

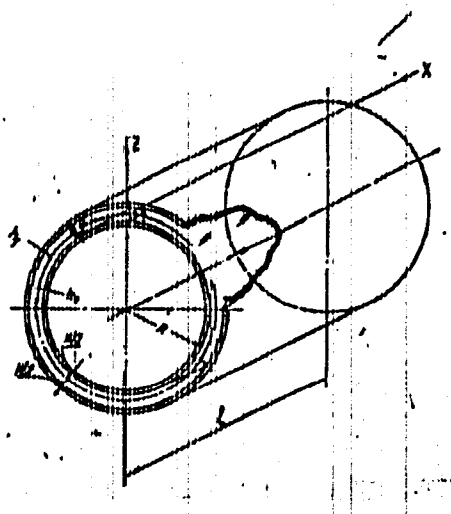

SUB CODE: 20/ SUBM DATE: 17Nov65/ ORIG REF: 008/ OTH REF: 002

Card 2/2 vlr

ILYSHEV, V.M., aspirant

Replacing a two-layer structurally anisotropic plate with a ribbed filler by an equivalent sandwich plate. Izv. vys. ucheb. zav.; mashinostr. no.7:43-48 '65. (MIRA 18:12)

1. Submitted November 27, 1964.

IL'YUCHMK, V.V., insh.

Wages for repairmen. Mash.-stroi. prom. 23 no.12:32-33 '57.
(MIRA 11:2)

1. Tadzhikskiy sovnarkhoz.
(Oil industries) (Wages)

KUZNETSOV, A.T., inzh.; ILYUCHEK, V.V., inzh.

Oil and fat industry of Tajikistan. Masl.-zhir.prom. 25 no.1:11-12 '59. (MIRA 12:1)

1. Sovnarkhoz Tadzhikskoy SSR.
(Tajikistan—Oil industries)

"Effect of Tropacine on the Activities of the Higher Branches of the Central Nervous System of Dogs," by R. Yu. Il'yuchenok, Laboratory of Comparative Pathophysiology and Therapy of Higher Nervous Activities of Animals, Institute of Higher Nervous Activities, Academy of Sciences USSR, Zhurnal Vyshsh Nervnoy Deyatel'nosti imeni I. P. Pavlov, Vol 7, No 2, Mar/Apr 57, pp 254-262

The work reports results of experiments conducted on dogs to determine the effect of tropacine, a substance chemically close to atropine and preparations of the spasmolytin and pentaphen type, on the higher branches

of the central nervous system. The Pavlov conditioned food reflex method was used in the experiments. Tropacine in doses of 0.002, 0.003, 0.005, 0.007, 0.01, 0015, 0.02, 0.025, 0.05, 0.1, 0.25, 0.3, 0.5, 1.0, and 2.5 milligrams per kilogram body weight was administered to physiologically normal dogs, and to dogs with experimental neuroses. The investigations established: (1) small doses of tropacine--0.003—0.1 milligrams per kilogram body weight--produced a brief and inappreciable intensification of conditioned food reflexes without disturbing differentiation functions; (2) the administration of optimal doses of the drug --0.005—0.25 milligrams per kilogram body weight--caused a considerable rise in the intensity of the food conditioned reflexes; a twofold and, praticularly, a tenfold increase in the maximal dose produced a considerable decrease in conditioned reflexes, an increase in the latent period, and the development of phase phenomena; (3) the daily administration of optimal doses of tropacine for a period of 15 days caused a rise in the conditioned reflexes, a diminution in their latent period, and disturbance of the differentiation functions; and (4) the application of tropacine in experimental neuroses had a positive therapeutic effect and contributed to the normalization of higher nervous activities. (U)

IL'YUCHENOK, R. Ya.

"The Influence Exercised by "Tropazine" on the Activity of the ~~Highest~~ Upper Branches ~~Sections~~ of the Central Nervous Systems of Dogs and Its Therapeutic Effect in the Case of Experimental Neurosis."

dissertation defended for the degree of Candidate of Medical Sciences at the Inst. for Higher Nervous Activity.

Defense of Dissertation (Jan-Jul 1957)
Sect. of Biological Sciences
Vest. AN SSSR, 1957, v. 27, No. 12, pp. 115-117

(KL 17-57, 99)

Sec. 2 Vol. 11/1 Physio-Biochem, etc. Jan58

L Lyuchenok, R. Y.

290. THE EFFECT OF TROPACIN ON THE ACTIVITY OF HIGHER PARTS OF THE CENTRAL NERVOUS SYSTEM IN DOGS (Russian text). Ilyuchenok R. Y. Z. VYSSH. NERV. DEYATEL. 1957, 7/2 (254-262) Tables 5

Investigation was conducted on four dogs by the classical Pavlov food-conditioned reflex method. The administration of tropacin in an optimal dose considerably enhanced conditioned and unconditioned reflexes, which testifies to an increase in the excitability of the cortex and subcortical regions of the brain. The size of the optimum dose depended directly on the type of the nervous system of the animal. A twofold and, particularly, a tenfold increase in the optimum dose resulted in a decrease of conditioned reflexes, a longer latency and development of phase phenomena. When an optimum dose was introduced daily (during 15 days), the conditioned reflex activity was of a wave-like nature; the increase in the unconditioned reflexes was, however, steady. Administration of tropacin in cases of experimental neurosis proved to have a positive therapeutic effect.

IL'YUCHENOK, R.Yu.

Disorders of the higher segments of the cen.ral nervous system of dogs caused by toxic doses of tropacin. Trudy Inst.vys. nerv.deiat.Ser.patofiziol. 6:158-175 '59. (MIRA 12:10)
(NERVOUS SYSTEM) (ACETIC ACID-TOXICOLOGY)

IL'YUCHENOK, R.Yu. (Moskva)

Tropacine therapy in experimental neuroses in dogs. Pat.fiziol. i eksp.terap. 3 no.4:26-30 Jl-Ag '59. (MIRA 12:12)

1. Iz laboratorii sravnitel'noy patofiziologii i terapii vysshey nervnoy deyatel'nosti zhivotnykh (zav. - prof. L.I. Kotlyarevskiy) Instituta vysshey nervnoy deyatel'nosti AN SSSR.
(AUTONOMIC DRUGS therapy)
(NEUROSES experimental)

IL'YUCHENOK, R.Yu.

Effect of iprazid on the bioelectric activity of the brain. Zhur.nevr. i psikh. 59 no.8:972-980 '59. (MIRA 12:12)

1. Otdel farmakologii (zav. - prof. M.D. Mashkovskiy) Vsesoyuznogo nauchno-issledovatel'skogo khimiko-farmatsevticheskogo instituta imeni S. Ordzhonikidze, Moskva.
(ELECTROENCEPHALOGRAPHY, pharmacol.)
(IPRONIAZID pharmacol.)

IL'YUCHENOK, R.Yu; MASHKOVSKIY, M.D.

Electrophysiological data on choline-reactive elements of the reticular formation of the brain stem. Fiziol. zhur. 47 no.11: 1352-1359 N'60. (MIRA 14:11)

1. From the Laboratory of Pharmacology, Chemico-Pharmaceutical Research Institute, Moscow.
(BRAIN) (CHOLINE) (PARASYMPATHOMIMETICS)

IL'YUCHENOK, R.Yu.

Comparative studies on the effect of aminazine and propazine on the bioelectric acitvity of the brain. Zhur. nerv. i psikh. 60 no. 2:202-209 '60. (MIRA 14:4)

1. Otdel farmakologii (zav. - prof. M.D. Mashkovskiy) Vsesoyuznogo nauchno-issledovatel'skogo khimiko-farmatsevticheskogo instituta imeni S. Ordzhonikidze, Moskva.
(PHENOTHIAZINE) (CHLORPROMAZINE) (ELECTROENCEPHALOGRAPHY)

ILYUCHENOK, R.YU.

"The role of cholinergic systems of the brain stem reticular formation in the mechanism of central effects of anticholinesterase and cholinolytic drugs."

Report submitted for the 1st Intl. Pharmacology Meeting Stockholm, Sweden 22-25 Aug 1961.

IL'YUCHENOK, R.Yu.

Functional interrelations between the cerebral cortex and subcortical formations under the influence of tropacine. Trudy Inst. vys. nerv. deiat. Ser. patofiziol. no.9:144-152 '61. (MIRA 15:4)
(TROPACINE) (CONDITIONED RESPONSE)

IL'YUCHENOK, R.Yu.

Dynamics of changes in the cortical activity under repeated administration of tropacine, Trudy Inst. vys. nerv. deiat. Ser. patofizicl. no.9:153-159 '61. (MIRA 15:4)
(TROPACINE) (CONDITIONED RESPONSE)

IL'YUCHENOK, R.Yu.; OSTROVSKAYA, R.U.

Effect of diprazine on the electrical activity of the brain.
Farm.i toks. 24 no.1:18-22 Ja-F '61. (MIRA 14:5)

1. Laboratoriya farmakologii (zav. - prof. M.D.Mashkovskiy) Vsesoyuznogo nauchno-issledovatel'skogo khimiko-farmatsevticheskogo instituta imeni S.Ordzhonikidze.
(PHENOTHIAZINE) (ELECTROENCEPHALOGRAPHY)

IL'YUCHENOK, R.Yu.; MASHKOVSKIY, M.D.

Correlation of anticholinesterase substances (galanthamine and eserine) with cholino- and adreno-lytics in the region of the reticular formation of the brain stem. Farm. i toksi. 24 no.4: 403-410 Jl-Ag '61. (MIRA 14:9)

1. Laboratoriya farmakologii (zav. - prof. M.D. Mashkovskiy) Vsesoyuznogo nauchno-issledovatel'skogo khimiko-farmatsevticheskogo instituta imeni S. Ordzhonikidze, Moskva.
(PHYSOSTIGMINE) (GALANTHAMINE) (BRAIN)
(PARASYMPATHOLYTICS)

LIBERMAN, S.S.; IL'YUCHENOK, R.Yu.

Influence of the "loading" of dialkylaminoethyl radical on the pharmacological properties of benzilic acid esters. Farm. i toks. 24 no.4:432-436 Jl-Ag '61. (MIRA 14:9)

1. Laboratoriya farmakologii (zav. - prof. M.D.Mashkovskiy) Vsesoyuznogo nauchno-issledovatel'skogo khimiko-farmatsevticheskogo instituta imeni S.Ordzhonididze.
(BENZILIC ACID) (PARASYMPATHOLYTICS)

MASHKOVSKIY, M.D.; IL'YUCHENOK, R.Yu.

Effect of galanthamine on the central nervous system. Zhur.nevr.i psikh. 61 no.2:166-175 '61. (MIRA 14:6)

1. Laboratoriya farmakologii (zav. - prof. M.D.Mashkovskiy) Vsesoyuznogo nauchno-issledovatel'skogo khimiko-farmatsevticheskogo instituta, Moskva.
(BRAIN) (GALANTHAMINE)

MASHKOVSKIY, M.D.; IL'YUCHENOK, R.Yu.

Comparative effect of some derivatives of phenothiazine on the electroencephalogram. Zhur. nevr. i psikh. 61 no.12:1836-1841 '61. (MIRA 15:7)

1. Laboratoriya farmakologii (zav. - prof. M.D. Mashkovskiy) Vsesoyuznogo nauchno-issledovatel'skogo khimiko-farmatsevticheskogo instituta, Moskva.
(ELECTROENCEPHALOGRAPHY) (PHENOTHIAZINE)

IL'YUCHENOK, R.Yu.; OSTROVSKAYA, R.U.

Participation of the mesencephalic reticular formation in the mechanism of the activating effect of arecoline and the blocking action of cholinolytic substances. Farm. i toks. 25 no.4:401-410 Jl-Ag '62. (MIRA 17:10)

1. Laboratoriya farmakologii (zav. - kand. med. nauk R.Yu. Il'yuchenok) Instituta eksperimental'noy biologii i meditsiny Sibirskogo otdeleniya AN SSSR.

IL'YUCHENOK, R.Yu.; OSTROVSKAYA, R.U.

Choline-reactive structures of the mesencephalon; a pharmacological study. Farm. i toks. 25 no.6:643-651 N-D '62. (MIRA 17:8)

1. Laboratoriya farmakologii (zav. - kand. med. nauk R.Yu. Il'yuchenok) Instituta eksperimental'noy biologii i meditsiny Sibirskogo otdeleniya AN SSSR.

IL'YUCHENOK, R.Yu.; OSTROVSKAYA, R.U.

Role of the cholinoreactive system of the mesencephalon in the mechanism of the activation of the electroencephalogram by nicotine. Biul.eksp.biol.i med. 54 no.7:43-48 Jl '62. (MIRA 15:11)

1. Iz laboratorii eksperimental'noy farmakologii (zav. - kand.med. nauk R.Yu.Il'yuchenok) Instituta eksperimental'noy biologii i meditsiny (dir. - prof. Ye.N.Meshalkin) Sibirskogo otdeleniya AN SSSR. Predstavlena deystvitel'nym chlenom AMN SSSR A.V. Lebedinskim.

(NICOTINE) (ELECTROENCEPHALOGRAPHY) (CHOLINE)

27 3500

39199

S/246/62/062/002/002/006
I015/I215

AUTHOR: Mashkovskiy, M. D., Il'yuchenok, R. Yu. and Ostrovskaya, R. U.

TITLE: Effect of imizine on the bioelectric activity of the brain

PERIODICAL: Zhurnal nevropatologii i psikhiatrii imeni S. S. Korsakov, v. 62, no. 2, 1962, 178–182

TEXT: The experiments were carried out on rabbits (chronic experiments) and cats (acute experiments) without narcosis. The technique of measuring the bioelectrical activity is described. Imizine (tofranil) was injected intravenously (0.5–5.0 mg/kg/b.w.) The results showed that doses of 0.5–1.0 mg/kg of imizine did not markedly change the bioelectric activity of the cerebral background but did affect the cortical cells by increasing their functional lability. Doses of 3–5 mg/kg caused a decrease in the cortical cell functional lability and had a blocking effect on the reticular formation of the brain stem. The authors conclude that the changes in the functional state of CNS following administration of the drug may arise because of its effect on the cortical neurons. There are 3 figures.

ASSOCIATION: Laboratoriya farmakologii (zav.—prof. M. D. Mashkovskiy) Vsesoyuznogo nauchno-issledovatel'skogo khimiko-farmatsevticheskogo instituta imeni S. Ordzhonikidze (Laboratory of Pharmacology—directed by Prof. M. D. Mashkovskiy, All-Union Chemical Pharmaceutical Research Institute imeni S. Ordzhonikidze) Moscow

SUBMITTED: May 5, 1960

Card 1/1

IL'YUCHENOK, R.Yu.; PASTUKHOV, Yu.F.

Electrophysiological study of the effect of piridrol on the central nervous system. Zhur. nevr. i psikh. 62 no.12:1821-1831 '62. (MIRA 16:11)

1. Laboratori[redacted]logii (zav. - kand.med.nauk. R.Yu. Il'yuchenok) Instituta eksperimental'noy biologii i meditsiny (dir. - prof. Ye.N.Meshalkin) Sibirskogo otdeleniya AN SSSR, Novosibirsk.

IL'YUCHENIK, R.Yu.; NAZAROV, L.A.

Correlation between serotonin and the central adrenoresponsive and cholinoresponsive systems in the mechanism of electroencephalogram activation. Dokl. AN SSSR 146 no.5:1237-1240 O '62. (MIRA 15:10)

1. Institut eksperimental'noy biologii i meditsiny Sibirskogo otdeleniya AN SSSR i Institut organicheskoy khimii Sibirskogo otdeleniya AN SSSR. Predstavleno akademikom A.V.Palladinym.
(INDOLOL) (ELECTROENCEPHALOGRAPHY)

POPOVA, N.K.; IL'YUCHENOK, R.Yu.; SERGIYEVSKIY, V.S.

Role of monoamine oxidase inhibition in the antiarrhythmic effect of iprazid. Izv.SO AN SSSR no.8. Ser. biol.-med. nauk no.2:121-123 '63. (MIRA 16:11)

1. Institut eksperimental'noy biologii i meditsiny Sibirskogo otdeleniya AN SSSR, Novosibirsk.

IL'YUCHENOK, R.Yu.; MATVEYEVA, R.B.

Studies on the effect of adrenergic and cholinolytic drugs in the trigeminal section of the brain stem. Farm. i toks. 26 no.5:525-531 S-O '63. (MIRA 17:8)

1. Laboratoriya farmakologii (zav. - kand. med. nauk R.Yu. Il'yuchenok) Instituta eksperimental'noy biologii i meditsiny Sibirskogo otdeleniya AN SSSR.

IL'YUCHENOK, R.Yu.; OSTROVSKAYA, R.U.

Study of the role of different segments of the central nervous system in the mechanism of the convulsant action of corazole. Biul. eksp. biol. i med. 55 no.3:55-60 Mr '63.

(MIRA 18:2)

1. Iz laboratorii farmakologii (zav. - kand. med. nauk R.Yu. Il'yuchenok) Instituta eksperimental'noy biologii i meditsiny (direktor - prof. Ye.N. Meshalkin) AN SSSR, Novosibirsk. Submitted March 20, 1962.

IL'YUCHENOK, R.Yu.; OSTROVSKAYA, R.U.; VINNITSKIY, I.M.

Effect of nanophin pachycarpine and gangleron on the activating and convulsive effects of nicotine. Biul. eksp. biol. i med. 56 no.11:85-89 O [i.e. N] '63. (MIRA 17:11)

1. Iz laboratorii farmakologii (zav. - kand. med. nauk R.Yu. Il'yuchenok) Instituta eksperimental'noy biologii i meditsiny Sibirskogo otdeleniya AN SSSR, Predstavlena deystvitel'nym chlenom AMN SSSR V.V. Parinym.

IL'YUCHENOK, R.Yu.; NAZAROV, L.A.

Mechanism of the effect of serotonin on the central nervous system. Dokl. AN SSSR 149 no.5:1217-1220 Ap '63. (MIRA 16:5)

1. Institut eksperimental'noy biologii i meditsiny Sibirskogo otdeleniya AN SSSR. Predstavleno akademikom V.N.Chernigovskim.
(SEROTONIN) (ELECTROENCEPHALOGRAPHY)

ZHUK, Ye.A.; POPOVA, N.K.; IL'YUCHENOK, R.Yu.; SHMERLING, M.D.; SERGIYEVSKIY, V.S.

Electrocardiographic and morphologic characteristics of experimental acute coronary insufficiency during the action of hydrazine derivatives. Pat. fiziol. i eksp. terap. 8 no.5:36-41 S-O '64. (MIRA 18:12)

1. Otdel eksperimental'noy biologii (zav. - doktor med.nauk B.B.Fuks) Instituta [redacted]i i genetiki Sibirskogo otdeleniya AN SSSR; Novosibirskiy universitet, Institut eksperimental'noy biologii i meditsiny Ministerstva zdravookhraneniya RSFSR, Novosibirsk. Submitted June 25, 1963.

POPOVA, N.K.; IL'YUCHENOK, R.Yu.; SERGIYEVSKIY, V.S.

Antifibrillation properties of some hydrazine derivatives. Farm. i toks. 27 no.4:454-457 Jl-Ag '64. (MIRA 17:11)

1. Laboratoriya farmakologii (zav. - kand. med. nauk R.Yu. Il'yuchenok) i eksperimental'no animal'naya laboratoriya (zav. - kand. med. nauk V.S. Sergiyevskiy) Instituta eksperimental'noy biologii i meditsiny Sibirskogo otdeleniya AN SSSR, Novosibirsk.

I0124B-66 EWT(1)/EWA(j)/EWA(b)-2 BW/RO

ACCESSION NR: AP5017081 UR/0290/65/000/001/0147/0149
615.785.4

AUTHOR: Il'yuchenok, R. Yu.; Nesterenko, L. N.

TITLE: Correlation between bioelectric and acetylcholinesterase activity changes of the brain under the action of galanthamine and eserine

SOURCE: AN SSSR. Sibirskoye otdeleniye. Izvestiya. Seriya biologo-meditsinskikh nauk, no. 1, 1965, 147-149

TOPIC TAGS: experiment animal, nervous system drug, drug effect, bioelectric phenomenon, enzyme, cerebral cortex, cerebellum, midbrain

ABSTRACT: In experiments on 166 cats acetylcholinesterase activity was determined in the cerebral cortex, thalamus, hypothalamus, midbrain, and medulla oblongata by a photocolorimetric method following intravenous administration of galanthamine or eserine in varying doses. Brain electric activity was recorded by an 8-channel electroencephalograph with electrodes implanted into different parts of the skull. Findings show that even a small dose of galanthamine (0.1 mg/kg) depresses acetylcholinesterase activity in different

Card 1/3

L0248-66

ACCESSION NR: AP5017081

parts of the brain, mostly in the cerebral cortex and medulla oblongata and to a much lesser degree in the midbrain. As for bioelectric activity, no statistically reliable changes were found with galanthamine doses up to 3 mg/kg. Larger doses (5 to 9 mg/kg) significantly depressed acetylcholinesterase activity in all parts of the brain except the midbrain. The bioelectric activity changes following larger dose administration accurately reflected the acetylcholinesterase changes. Similar results were found with eserine administration (in doses 10 to 12 times smaller). These data suggested that the activating effect of anticholinesterase substances is based specifically on depressed acetylcholinesterase activity of the midbrain. To test this hypothesis, additional experiments were carried out on cats with a premesenchephalic section. With galanthamine and eserine administration, the degree of acetylcholinesterase activity depression in all parts of the brain, including the parts above the section, was found the same as for animals with an intact brain. However, the anticholinesterase substances did not produce any EEG activity. Thus, bioelectric activation apparently requires blocking of the enzyme in the midbrain, in addition to depression of acetylcholinesterase activity in the diencephalon and

Card 2/3

L 01248-66

ACCESSION NR: AP5017081

cerebral cortex. Orig. art. has: 2 tables.

ASSOCIATION: Otdel eksperimental'noy biologii Instituta tsitologii i genetiki Sibirskogo otdeleniya AN SSSR, Novosibirsk (Experimental Biology Department of the Cytology and Genetics Institute of the Siberian Branch, AN SSSR)

SUBMITTED: 23Mar64 ENCL: 00 SUB CODE: LS

NR REF SOV: 002 OTHER: 001

Card 3/3

IL'YUCHENOK, R.Yu., kand.med.nauk; VINNITSKIY, I.M.

Antispasmodic effect of buxamine. Farm. i toks. 28 no.5:530-533 S-O '65. (MIRA 18:12)

1. Laboratoriya farmakologii (zav. - kand.med.nauk R.Yu. Il'yuchenok) otdela eksperimental'noy biologii Instituta tsitologii i genetiki Sibirskogo otdeleniya AN SSSR, Novosibirsk. Submitted March 2, 1964.

IL'YUCHENOK, R.Yu.; MATVEYEVA, R.B.

Participation of M-choline-reactive systems in the mechanism of the central action of aminazine. Farm. i tokis. 28 no.6:643-646 N-D '65. (MIRA 19:1)

1. Laboratoriya farmakologii (zav. - kand.med.nauk R.Yu. Il'yuchenok) otdela eksperimental'noy biologii Instituta tsitologii i genetiki Sibirskogo otdeleniya AN SSSR, Novosibirsk.

NAUMENKO, Ye.V.; IL'YUCHENOK, R.Yu.; NESTERENKO, L.N.

Effect of nivaline on the hypophysial-adrenal system. Farm. i toks. 28 no.6:659-662 N-D '65. (MIRA 19:1)

1. Laboratoriya farmakologii (zav. - doktor med.nauk R.Yu. Il'yuchenok) otdela eksperimental'noy biologii i patologii Instituta tsitologii i genetiki Sibirskogo otdeleniya AN SSSR, Novosibirsk.

L 23701-66 EWT(1)/T JK

ACC NR: AP6004832 SOURCE CODE: UR/0239/65/051/010/1177/1181

AUTHOR: Il'yuchenok, R. Yu.; Nesterenko, L. N.

ORG: Pharmacologic Laboratory of the Department of Experimental Biology and Pathology, Institute of Cytology and Genetics, Siberian Division, AN SSSR, Novosibirsk (Laboratoriya farmakologii Otdela eksperimental'noy biologii i patologii Instituta tsitologii i genetiki Sibirskogo otdeleniya AN SSSR)

TITLE: Participation of the acetylcholine-cholinesterase system in the mechanism of reticulocortical activation

SOURCE: Fiziologicheskiy zhurnal SSSR, v. 51, no. 10, 1965, 1177-1181

TOPIC TAGS: experiment animal, brain, nervous system drug, EEG, enzyme, tertiary amine, quaternary amine, hematoencephalitic barrier

ABSTRACT: A combined study on EEG effects of acetylcholinesterase inhibitors in 159 cats was conducted with eserine, galanthamine and proserine to determine their depressant effects on this enzymatic activity in various brain areas and the relationship to bioelectric brain activity and animal behavior. Enzymatic activity was determined in the hemisphere cortex, thalamus, hypothalamus, midbrain and medulla oblongata. Electrodes were introduced into the sections corresponding

Card 1/2

UDC: 612.815+612.826

L 23701-66

ACC NR: AP6004832

to sensomotor and visual cortex areas. Eserine and galanthamine were introduced intravenously. Results revealed parallelism between gradual depressant effect on acetylcholinesterase, bioelectric brain activity and animal behavior, particularly pronounced with galanthamine at a 3-5 mg/kg dose; a similar effect was obtained with eserine at 1/10 this dose accompanied by rapid, low amplitude bioelectric activity. These changes were seen when acetylcholinesterase activity had been reduced to 8.8% in the hemispheres, 50.9% in the thalamus, 33.9% in the hypothalamus, 41.3% midbrain and 36.5% medulla oblongata. A comparison of these effects with the effects of proserine introduced intravenously and into the lateral ventricles of the brain supports the assumption that proserine does not penetrate the hematoencephalit barrier; applied into the ventricles, proserine had the same effect as the other amines. With ten-fold inhibitor doses subcortical acetylcholinesterase activity, while depressed, remained at a high level. In tests with gradual resection of the brain stem and parallel determination of acetylcholinesterase under inhibitor effect, an attempt was made to determine the part of the stem to which reticulocortical activation is related. Absence of EEG activation appeared only when the midbrain was removed. It was concluded that cortical activation is related to the degree of acetylcholinesterase depression in the mesencephalic part of the brain. Orig. art. has: 2 figures.

SUB CODE: 06/ SUBM DATE: 06May64/ ORIG REF: 004/ OTH REF: 003

Card 2/2

L 8186-66 EWA(j)/EWA(b)-2/EWT(1) RO

ACC NR: AP5027477 SOURCE CODE: UR/0219/65/060/010/0057/0060

AUTHOR: Il'yuchenok, R. Yu.; Nesterenko, L. N.

ORG: Pharmacology Laboratory of the Department of Experimental Biology and Pathology of the Cytology and Genetics Institute of the Siberian Branch AN SSSR, Novosibirsk (Laboratoriya farmakologii Otdela eksperimental'noy biologii i patologii Instituta tsitologii i genetiki Sibirskogo otdeleniya AN SSSR)

TITLE: Effects of eserine and galanthamine on acetylcholinesterase and bioelectric activity of the brain in animals with a premesencephalic section

SOURCE: Byulleten' eksperimental'noy biologii i meditsiny, v. 60, no. 10, 1965, 57-60

TOPIC TAGS: experiment animal, nervous system drug, enzyme, electroencephalography, brain tissue, midbrain, cerebral cortex, bioelectric phenomenon, colorimetric analysis

ABSTRACT: Effects of anticholinesterase preparations on acetylcholinesterase activity and bioelectric activity of the brain were studied in a series of experiments on cats. Galanthamine (9 mg/kg) and eserine (0.9 mg/kg) were administered intravenously to groups of animals with

Card 1/2 UDC: 615.785.4-092.259:612.826+612.826.1/.3-089.856]:612.822

L 6166-66

ACC NR: AP5027477

0

an intact brain. Acetylcholinesterase activity of the cortex, thalamus, hypothalamus, midbrain, and medulla oblongata was determined by a photoelectrocolorimetric method developed by G. A. Pangsyan. EEG activity of the sensomotor and optic areas was recorded by an eight channel Kayzer electroencephalograph. Findings show that galanthamine inhibits the acetylcholinesterase activity of the brain to the same degree in animals with a premesencephalic section as in animals with an intact brain. Results for eserine in a corresponding dose of 0.9 mg/kg were similar. No EEG activation reaction was found for animals with the premesencephalic section despite almost complete inhibition of acetylcholinesterase activity above the section. However, a distinct change in bioelectric activity was found for animals with an intact brain, with EEG activation directly dependent on the degree of acetylcholinesterase activity inhibition in the mesencephalic part of the brain. The authors conclude that EEG activation depends not only on acetylcholinesterase activity inhibition of the brain, but also on the presence of a connection between the cortex and mesencephalic reticular formation. Orig. art. has: 2 tables and 2 figures.

SUB CODE: LS/ SUBM DATE: 08Apr64/ ORIG REF: 003/ OTH REF: 004

jw

Card 2/2

USSR/Pharmacology. Toxicology. Cholinergic Drugs V

Abs Jour : Ref Zhur-Biol., No 8, 1958, 37536

Author : Il'yuchenok T. Yu.
Inst : [redacted] Minsk State Medical Institute.
Title : Effect of Organophophorus Compounds on Salivation and Intestinal Secretion (Vliyaniye fosfororganicheskikh soyediniy na slyunootdeleniye i kishechnuyu sekretsiyu).

Orig Pub *: V sb: Khimiya i primeneniye fosfororgan. Soyedineniy. M., AN SSSR, 1957, 318-322. Diskus, 323

Abstract : The quantity and solid residue of saliva in dogs fed 2 g of powdered sugar were determined in the isolated ducts of the parotid and submaxillary glands. The Borisov and Rozingart method of determination of the activity of cholinesterase was used. The Tiri-Vella method was used to study the

Card 1/3

* Also was presented at the First Conference on Phosphorus Compounds, held at Kazan, 8-10 December, 1955.

USSR/Pharmacology. Toxicology. Cholinergic Drugs V

IL'YUCHENOK, T.Yu.

Hypotensive action of BAS preparation 1-benzyl-2-methyl-5-methoxytryptamine. Zdrav. Bel. 7 no.3:25-30 Mr '61. (MIRA 14:3)

1. Kafedra farmakologii (zaveduyushchiy - prof. K.S.Shadurskiy) Minskogo meditsinskogo instituta.
(INDOLE) (HYPERTENSION)

IL'YUCHENOK, Tat'yana Yulianovna, kand. med. nauk; ISKAREV, Nikolay Afanas'yevich, kand. med. nauk; SHADURSKIY, Konstantin Stanislavovich, prof., doktor med.nauk; YAKIMOVICH, Leonid Aleksandrovich, kand. med.nauk; GES', N., red.; VARENIKOVA, V., tekhn. red.

[Pharmacology; a course of lectures] Farmakologiia; kurs lektsii. Minsk, Izd-vo M-va vysshego, srednego spetsial'nogo i professional'nogo obrazovaniia BSSR, 1963. 346 p. (MIRA 16:9)
(PHARMACOLOGY)

IL'YUCHENOK, T.Yu., kand. med. nauk; ISKAREV, N.A., kand. med. nauk; KORABLEV, M.V., kand. med. nauk; REUT, N.A., kand. med. nauk; YAKIMOVICH, L.A., kand. med. nauk; KHOMICH, N.V., assistent; SHADURSKIY, K.S., prof.; KRYUKOVSKAYA, B., red.; YEHMELENKO, V., tekhn. red.

[Manual on prescriptions] Rukovodstvo po retsepture. Izd. 3., ispr. i dop. Minsk, Izd-vo "Belarus'," 1963. 178p. (MIRA 17:2)

VINOGRADOVA, Ye.V.; GRINEV, A.N.; DANUSEVICH, I.K.; DEIK, M.F.; DUBOVIK, B.V.; ZAKHAREVSKIY, A.S.; IL'YUCHENOK, T.Ku.; KOST, A.N.; MARTINOVICH, G.I.; MIKLEVICH, A.V.; PIL'TIYENKO, L.F.; RACHKOVSKAYA, I.V.; REUT, N.A.; TALAPIN, V.I.; TAMARINA, N.Z.; TERENT'YEV, A.P.; SHABURSKIY, K.S.

Research on pharmacological agents with prolonged hypotensive action. Vest. AMN SSSR 18 no.1:69-86 '63. (MIRA 16:2)

1. Laboratoriya spetsial'nogo organicheskogo sinteza khimicheskogo fakul'teta Moskovskogo gosudarstvennogo universiteta imeni Lomonosova i kafedra farmakologii Minskogo meditsinskogo instituta.
(HYPOTENSION) (INDOLE)

L 14150-66 EWT(m)

ACC NR: AP6001319 SOURCE CODE: UR/0248/65/000/009/0055/0058

AUTHOR: Grinev, A. N.; Il'yuchenok, T. Yu.; Lepekhin, V. P.; Shadurskiy, K. S.

ORG: Institute of Medical Radiology, AMN SSSR, Obninsk (Institut meditsinskoy radiologii AMN SSSR)

TITLE: Loss of hypotensive activity by 5-hydroxyindole derivatives in irradiated animals

SOURCE: AMN SSSR. Vestnik, no. 9, 1965, 55-58

TOPIC TAGS: serotonin, radiation drug, radioprotective agent

ABSTRACT: A hypotension lasting from 32 to 77 days following administration of eighteen indole derivatives was established in rats of the August strain. Preliminary exposure of the animals to 300 or 600 rads of external radiation altered the hypotensive effect of the drugs considerably. A 300 rad dose increased the latent period, i. e., the time that hypotension set in, and shortened the duration of the effect of compound ORF-50. The hypotensive effect was induced after a 600 rad dose, and the blood pressure remained steady and within normal limits. The blood pres-

UDC: 615.7-092.259 : 617-001.28

Card 1/2

L 14150-66
ACC NR: AP6001329

sure of irradiated rats not previously treated with one of the protective agents tended to drop. The author conjectures that irradiation disrupts the mechanisms by which the 5-hydroxyindole derivatives participate in the hypotensive effect. Orig. art. has: 2 figures, 1 table.

SUB CODE: 06/ SUBM DATE: 05Jun65/ ORIG REF: 005/ OTH REF: 000

Card 2/2

86799

S/142/60/000/003/014/017
E192/E482

9,2540 (1020,1138,1159)

AUTHORS: Veksler, G.S. and Il'yuk [redacted]

TITLE: Beam Tetrode as the Series Tube in an Electronic Stabilizer

PERIODICAL: Izvestiya vysshikh uchebnykh zavedeniy, Radiotekhnika, 1960, No.3, pp.402-403

TEXT: In order to obtain a large stabilization factor K and a low output impedance in an electronic voltage stabilizer with a series tube, it is desirable to employ a tube with a high amplification coefficient μ and a low internal resistance R_i. However, the triodes which are normally used as the series tubes do not meet these requirements. Also the use of pentodes is not satisfactory since their internal resistance R_i is high. It is suggested, therefore, that a beam tetrode (or pentode) should be used provided its operating conditions are chosen in such a manner that it operates below the knee of its anode characteristics where the internal resistance is comparatively low. Such a tetrode should work at anode voltages of about 20 to 40 V and its screen grid should be stabilized at a suitable voltage to ensure that the

Card ~~1/3~~

86799
S/142/60/000/003/014/017
E192/E482

Beam Tetrode as the Series Tube in an Electronic Stabilizer

device works as a tetrode (or pentode). Unfortunately, not every tube is suitable for this purpose and it is necessary to choose such tetrodes whose characteristics diverge in a fan-like manner at the voltages below the knee. A stabilized circuit based on a beam tetrode operating with a fixed screen-voltage is shown in Fig.2. The normal operating conditions for this stabilizer are: input voltage - 360 V, output current - 75 mA; if the input voltage is varied from 320 to 420 V, the output voltage changes by less than 0.5 V. The stabilization factor of the device is K = 188. The performance of this device was compared with a normal stabilizer using a triode as the series tube. It was found that the stabilization factor in this case was K = 51. There are 3 figures and 1 non-Soviet reference.

ASSOCIATION: Kafedra kinotekhniki Kiyevskogo ordena Lenina politekhnicheskogo instituta (Department of Cine-Technics of Kiyev "Order-of-Lenin" Polytechnical Institute)

SUBMITTED: August 28, 1959

Card ~~2/5~~

IL'YUKEVICH, L.A.; SHAGISULTANOVA, G.A.

Interaction of cupric chloride and bromide with trimethylamine hydrochloride. Zhur. neorg. khim. 8 no.10:2308-2313 O '63. (MIRA 16:10)

(Copper halides) (Trimethylamine)

IL'YUKEVICH, L.A.; POZNYAK, A.L.; SHAGISULTANOVA, G.A.

Electron paramagnetic resonance in some copper compounds. Zhur. strukt.khim. 4 no.6:919 N-D '63. (MIRA 17:4)

1. Belorusskiy gosudarstvennyy universitet imeni Lenina.

POZNYAK, A.L.; TADEUSH, V.N.; IL'YUKEVICH, L.A.

Electron paramagnetic resonance of copper complex compounds in the 8 mm. range. Zhur.strukt.khim. 6 no.5:779-781 S-O '65. (MIRA 18:12)

1. Belorusskiy gosudarstvennyy universitet imeni V.I.Lenina. Submitted March 1, 1965.

SHAGISULTANOVA, G.A.; IL'YUKEVICH, L.A.; BURDYKO, L.I.

Effect of γ- and ultraviolet radiation on copper glycocholate. Zhur.fiz.khim. 39 no.11:2730-2734 N '65. (MIRA 18:12)

1. Belorusskiy gosudarstvennyy universitet imeni V.I.Lenina.

SHAGISULTANOVA, G.A.; IL'YUKEVICH, L.A.; BURDYKO, L.I.

Dimethylammonium chlorocuprates. Zhur. neorg. khim. 10 no.2: 425-428 F '65. (MIRA 18:11)

1. Submitted July 18, 1963.

APPROVED FOR RELEASE: 04/03/2001 CIA-RDP86-00513R000618520017-1"

APPROVED FOR RELEASE: 04/03/2001 CIA-RDP86-00513R000618520017-1"

BELOUSOV, I.A., mashinist teplovoza; FOKIN, M.D., kand.tekhn.nauk; ILYUKHIN, A.A., mashinist-instruktor; GUREVICH, A.N., kand.tekhn. nauk.

Reply to the inquiries of our readers. Elek. i tepl. tiaga no.1:42-43 Ja '61. (MIRA 14:3)

1. Depo Kazalinsk Kazakhskoy dorogi (for Belousov). 2. Depo Krasnoufimsk Kazanskoy dorogi (for Ilyukhin).
(Railroads—Brakes)

28709

S/021/61/000/008/004/011
D210/D303

16.3400

AUTHOR: Ilyukhin, A.G.

TITLE: On reducing a system of ordinary differential equations containing a parameter

PERIODICAL: Akademiya nauk Ukrayins'koyi RSR. Dopovidi, no.8, 1961, 998-1000

TEXT: The author considers a system of linear differential equations

$$\frac{dy}{dt} = A(\tau, \varepsilon)y \qquad (1)$$

where y is an n-dimensional vector, $\tau = \varepsilon^{\sigma} t$ - the "slow" time, ε - a small positive parameter, σ - a positive integer, $A(\tau, \varepsilon)$ - a matrix of the order n, differentiable any number of times with respect to τ in the domain

Card 1/6

$$0 \leqslant \tau \leqslant L, \quad 0 < \varepsilon \leqslant \varepsilon_0 \tag{2}$$

Let $A(\tau, \varepsilon)$ have the form

$$A(\tau, \varepsilon) = \sum_{\nu=0}^{\infty} \varepsilon^{\nu} A^{\nu}(\tau) \tag{3}$$

$A^{\nu}(\tau)$ being matrices differentiable any number of times in the domain (2). It will be supposed that the roots of the characteristic equation

$$\mathrm{Det} \| A^{0}(\tau) - \lambda E \| = 0 \tag{4}$$

$\lambda_1(\tau), \lambda_2(\tau), \ldots \lambda_n(\tau)$ can be divided into s classes ($s \leq n$) in such a way that the roots from different classes do not intersect anywhere in the domain (2), i.e. are not equal to each other. Each class will contain n_j roots, it being $\sum_{j=1}^{s} n_j = n$. The problem of reducing system (1) to almost diagonal form consists in finding a matrix $Q(\tau,\varepsilon)$ of nth order, differentiable with respect to any number of times. It can be shown that the problem of justifying the well-known formal process of constructing the said matrix $Q(\tau,\varepsilon)$ is connected with the problem of existence and uniqueness of solving a special system of ordinary non-linear differential equations with coefficients which depend on the small parameter

$$\frac{dv_j}{dt} = f_j(\tau, v_1 v_2, \ldots, v_m, \varepsilon) \quad (j = 1, \ldots, m) \tag{9}$$

The right hand sides in (9) are polynomials in $v_1, v_2, \ldots, v_m$. The coefficients of the polynomials $f_j(\tau, v, \varepsilon)$ are, according to the assumption, differentiable with respect to any number of times and can be expanded into asymptotic series of power of ε in the domain (2). Neglecting the terms of $f_j(\tau, v, \varepsilon)$ with higher powers of v one obtains functions that are linear in v

$$\alpha_j(\tau, \varepsilon) + \sum_{k=1}^{m} \alpha_{ik}(\tau, \varepsilon) v_k \quad (j = 1, \ldots, m) \tag{10}$$

In the present paper Sibuya's results (Ref. 2: Y. Sibuya, Journ. Fac. Science Univers. Tokyo 7, 527 (1958)) which had local character are slightly generalized. In the case of real τ and ε, the author succeeds in justifying the process of reduction for the

whole interval of variation of $\tau[0,L]$. Following theorem is valid: Suppose that

$$\mu_j(\tau) \neq 0 \quad (j = 1,\ldots,m) \tag{12}$$

anywhere in the domain (2) and let

$$v_j = \sum_{v=1}^{\infty} p_{jv}(\tau)\varepsilon^{v} \quad (j = 1,\ldots,m) \tag{13}$$

be a formal solution of the system (9) in which $p_{jv}(\tau)$ ($j=1,\ldots m$; $v = 1,2\ldots$) are differentiable with respect to τ any number of times. Then, if $\varepsilon_1 \leqslant \varepsilon_0$ is suitably chosen, in the domain,

$$0 \leqslant \tau \leqslant L, \; 0 < \varepsilon \leqslant \varepsilon_1 \tag{14}$$